Analog Output Evaporation Gauge Model 6844-A

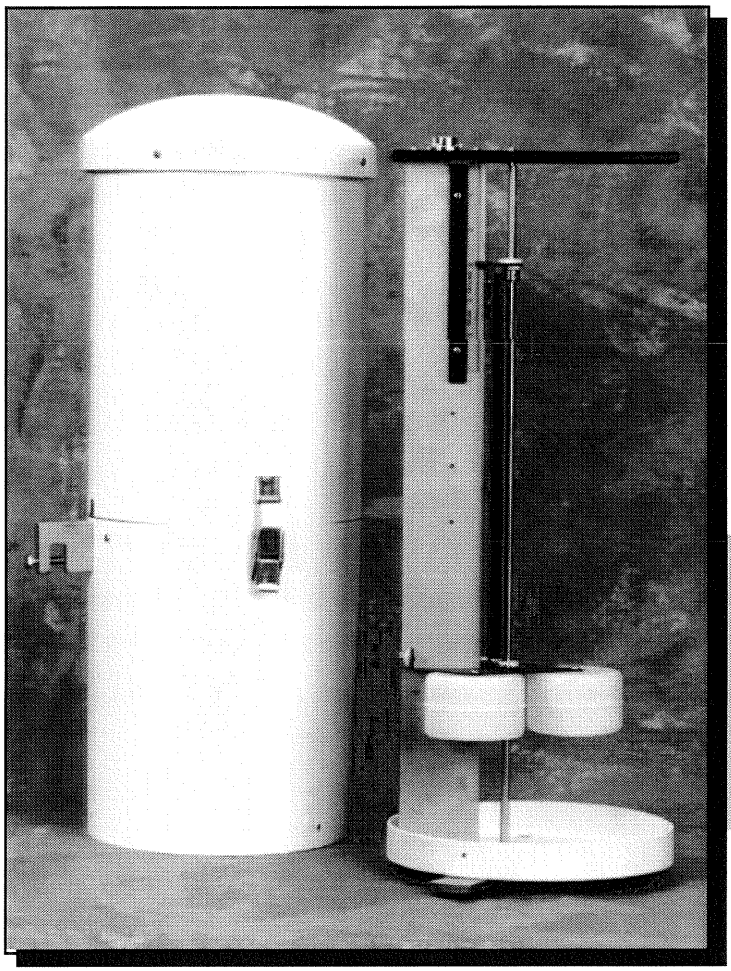

User's Manual

allweatherinc

ALL WEATHER INC. • 1165 NATIONAL DRIVE • SACRAMENTO, CALIFORNIA • USA • WWW.ALLWEATHERINC.COM

REVISIONS				
REV	ECN#	DESCRIPTION	DATE	APPROVED
A	2024	INITIAL RELEASE	4/84	
B	4188	REVISE STILLING WELL DRAWING (M102813-003)	2/93	
C	4262	ADD ITEM NUMBERS TO BOM	6/93	
D	4983	INCORPORATE CONDUCTIVE PLASTIC POTENTIOMETER		

MANUAL FOR ANALOG OUTPUT EVAPORATION GAUGE MODEL 6844-A

APPEND THE FOLLOWING DOCUMENTS WHEN CHANGING THIS DOCUMENT:	

ENG		DT 8-22-03	TITLE MANUAL FOR ANALOG OUTPUT EVAPORATION GAUGE MODEL 6844-A	allweatherinc
MFG		DT 8/22/03		
QA		DT		
SALES		DT		
DES. ENG		DT		
BY	J. EWING		DOCUMENT NUMBER	
DATE	6/15/93		6844-A01	

Introduction

The Model 6844-A Analog Output Evaporation Gauge is designed to eliminate manual measurements of evaporation pan water levels with hook gauges. A unique system of balanced floats in combination with a potentiometer provides automatic water level sensing. The gauge is self-contained, and includes a stilling well for increased accuracy.

The evaporation gauge features a stainless steel base and main support. The main support guides the indicator, the potentiometer drive, and the polypropylene floats. The float mechanism is designed to eliminate backlash, giving a 1:1 ratio with the rising and falling water level.

The float carrier is guided by teflon bearings on stainless steel shafts. Rotation of the carrier is prevented by two teflon rollers. None of the moving parts other than the three floats is in contact with the water, except when the evaporation pan is filled to capacity.

To ensure maximum response, a bubble level and levelling screws are provided to give a true verticla alignment when the sensor is installed. Withthe guide shaft perfectly vertical, bearing side thrust is minimized.

The float and sensing mechanisms are housed within a stilling well for maximum preotection and increased accuracy. The stilling well eliminates false readings due to wind and rain acting directly upon the floats.

The analog output is provided by a continuous turn, single-wiper potentiometer rated at 5,000 ohms. The potentiometer is driven by coupling through a nylon gear to a nylon rack. A fifty-foot, three-conductor shielded cable is supplied attached to each gauge.

Contents

Installation

This instrument is thoroughly tested and fully calibrated at the factory and is ready for installation. Please refer to the return authorization card included in the packing box if damage has occurred. Also, notify All Weather Inc.

To install the evaporation gauge:

1 Remove the sensing assembly from its plaastic bag and remove all packing materials from the mechanisms.

2 The stilling well tube separates at its middle. Unfasten the two draw latches and remove the top half of the tube. Remove the foam rubber piece from the float carrier mechanism.

3 A two-piece condensation shield rests loosely on three support brackets near the top of the lower housing. Ensure that the shield is clear of any moving parts.

4 Ensure that the indicating scale and pointer are fastened in place. If metric units are desired, remove and rotate the scale.

5 Slide the float carrier to ensure that it moves freely. Do not touch the round stop that sets the lower limit of travel of the carrier. If either the stop or scale is moved out of positioin for any reason, refer to the ***Calibration*** section for recalibration of the electrical portion of the gauge.

6 Place the lower half of the stilling well into the evaporation pan. Clip the slotted clamp over the rim of the pan. Secure the stilling well loosely to the pan with the clamp screw.

7 Adjust the two levelling screws on the base of the stilling well until the bubble level indicates the stilling well is level. Tighten the clamp screw. Fill the evaporation pan to 8" (200 mm) in depth. *Note: Overfilling the pan will prevent the floats from moving until the water is at the 8" mark.*

8 Double-check that the gauge is level using the bubble level. Repeat Steps 6 and 7 until the gauge is level.

9 Connect the sensor cable to the appropriate monitoring device. Read the scale and compare to the monitor reading. If the two do not agree, refer to the ***Calibration*** section.

10 Replace the top cover and latch it in place.

Theory of Operation

The Model 6844-A Analog Output Evaporation Gauge is designed to operate as a floating, positional measuring apparatus. As the level of the fluid being measured changes, the floats will rise or fall accordingly. The primary use of a device such as this is in studying evapo-transpiration rates to determine irrigation schedules. The gauge is designed to be mounted inside a standard evaporation pan.

By attaching the floating mechanism to a recording system, an accurate record of the fluid level changes can be obtained. This information is normally gathered manually using hook gauges, which requires daily observations by the station operator and may introduce errors due to variations in the way different operators read the gauge. The Model 6844-A, with its automatic operation and reliable, linear potentiometer mechanism, eliminates these errors and relieves the operator from a daily observation routine, providing an accurate historical document.

The design of the float and analog output mechanism allows versatility in the setting of the data reference point and type of data.

- Maximum pen travel is set with an adjustable block.
- Float travel cna represent either water added to or removed from the pan depending on the zero reference at the start of the output data.
- The potentiometer can be wired to a recorder to give either an increasing or a decreasing output.

Calibration

In order to correctly calibrate the analog output evaporatin gauge, the gauge must be connected to either the customer's monitoring equipment or to the equipment provided with the gauge. An alternate test configuration can be obtained using a 2.5K ohm resistor, a 5 VDC regulated power source, and a $4^1/_2$-digit voltmeter. Connect the resistor to the (+) power source output. Then, connect the gauge's white wire to the resistor and the black wire to the (-) power source output. Measure the voltage change across the red (+) and black (-) wires.

1 Position the float assembly at the top of the gauge until it stops against the top plate. Secure the assembly in place. The potentiometer should be at 0 ohms with a voltage output of 0 VDC.

2 Locate the potentiometer on the vertical support. Loosen the clmaping screws holding the potentiometr onto the blue mounting plate.

3 Rotate the potentiometer to obtain 0 VDC. Loosen the flat assembly and allow it to travel downward slightly. The voltage reading should change immediately.

4 Repeat steps 1-3 until no further adjustment is required.

5 Re-tighten the clamp screws.

6 Move the float assembly to its lowest position.

7 Adjust the stop to a point just before the end of the potentiometer electrical travel (the voltage should increase to a maximum and then drop to zero or indicate erratic values). Set the stop to give 5.0 VDC.

8 Repeat steps 6-7 until best results are achieved.

9 Align the end of the ruled scale with the pointer of the float assembly. (The ruled scale and pointer are both on the side opposite the potentiometer housing.) For normal evaporation measurements, the scale is set with the zero mark at the top position.

10 A clamping plate is used to fasten the ruled scale onto the main support. Loosen the clamp screw and slide the scale up or down as required.

11 The reverse side of the scale indicates millimeters. Install the scale to indicate inches or millimeters as required.

12 The linearity of the sensor can be checked by ranging the float assembly from minimum to maximum and noting the voltage and scaled. units at evenly spaced points.

13 To verify the analog output against actual conditions, place the lower half of the gauge into an evaporation pan (Model 6821 or NWS equivalent). Refer to *Installation.*

14 Add water to within 2 inches (50 mm) of the top edge of the pan. Read the output of the gauge and note the indicator reading.

15 Remove water using a graduated cylinder. The cylinder must be 15" in depth with a cross-sectional area that is 0.01 times that of the pan. The Model 6833 cylinder is graduated into 1" intervals, giving an accuracy of 0.01" in depth changes within the pan. Read the analog output.

16 Measure the amount of water in the cylinder.

17 Compare the values obtained in steps 14, 15, and 16. These should agree, with the voltage reading from step 15 being the most accurate.

18 Repeat steps 14-17. If there are considerable differences, contact All Weather Inc. customer service for assistance. If there is good agreement, place the gauge into service, replacing all covers and securing all latches.

CALIBRATION CERTIFICATE

Instrument Analog Output Evaporation Gauge

Model Number 6844-A Serial Number

Range	Calibration Points	Sensor Output	
0-6 inches	0 inches	ohms	
0-150 mm	6 inches	ohms	
		Typical	**Actual**
	Total Sensoor Resistance	5000 ohms	ohms
* with excitation voltage of 3.333 VDC			

Cable T600503 Length 50 ft. Shield Yes ■ No ❑

❑ Refer to enclosed Calibration Sheet. Figure _____

❑ Must be used in conjunction with:

Instrument _____

Model Number _____ Serial Number _____

Technician _____ Date _____

Maintenance

Maintenance should include regularly scheduled checking and cleaning of all moving parts. Removal of water scum and mineral deposits from guide bars is critical in order for smooth movement of the floats. Algae inhibitors may reduce servicing time by keeping the water free of algae. Preventive maintenance will provide greater reliability and longer sensor life.

Warranty

Unless specified otherwise, All Weather Inc. (the Company) warrants its products to be free from defects in material and workmanship under normal use and service for one year from date of shipment, subject to the following conditions:

a. The obligation of the Company under this warranty is limited to repairing or replacing items or parts which have been returned to the Company and which upon examination are disclosed, to the Company's satisfaction, to have been defective in material or workmanship at time of manufacture.

b. The claimant shall pay the cost of shipping any part or instrument to the Company. If the Company determines the part to be defective in material or workmanship, the Company shall prepay the cost of shipping the repaired instrument to the claimant. Under no circumstances will the Company reimburse claimant for cost incurred in removing and/or reinstalling replacement parts.

c. This warranty shall not apply to any Company products which have been subjected to misuse, negligence, or accident.

d. This warranty and the Company's obligation thereunder is in lieu of all other warranties, express or implied, including warranties of merchantability and fitness for a particular purpose, consequential damages, and all other obligations or liabilities.

No other person or organization is authorized to give any other warranty or to assume any additional obligation on the Company's behalf, unless made in writing and signed by an authorized officer of the Company.

Specifications

Range	0-5.6 inches (0-142 mm)
Accuracy	±0.015" of true water level with no mineral deposits on guide rods
Sensor	Potentiometer, 5K ohms continuous, ±5%
Resolution	Infinite
Linearity	±0.5%
Materials	corrosion resistant
Size	
Sensor	7 3/4" D x 21" H (197mm x 533 mm)
Stilling well	9" D x 24" H (229 mm x 610 mm)
Weight/Shipping	15 lbs./20 lbs. (7 kg/9 kg)

Parts Lists and Drawings

The following pages include a parts list and reference drawings to assist in installation and maintenance of this instrument.

REVISIONS			6844-A04	
REV	ECO	DESCRIPTION	DATE	APPROVED
A	2023	INITIAL RELEASE	11/30/83	
B	2024	SEE ECN FOR HISTORY	3/17/84	
C	4983	REPLACE WIREWOUND POT WITH PLASTIC POT. REDRAWN		

M480077 ORIGINAL WIREWOUND

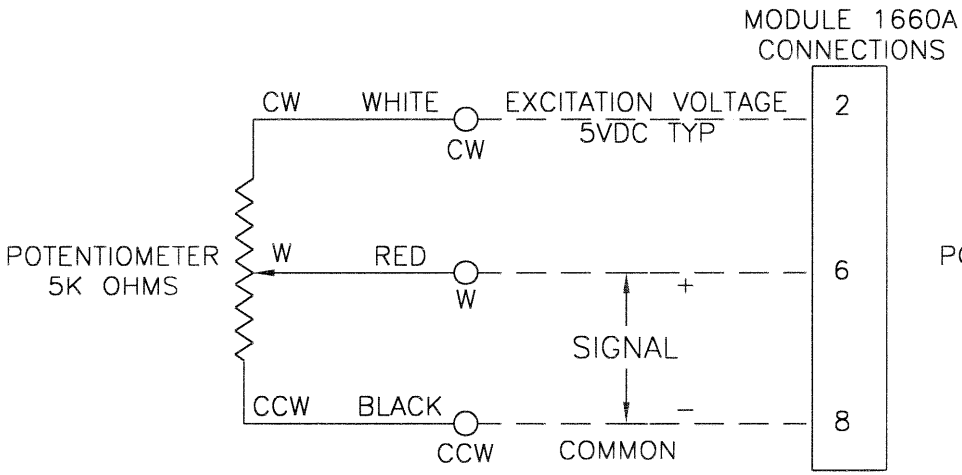

M480114 REPLACEMENT CONDUCTIVE PLASTIC

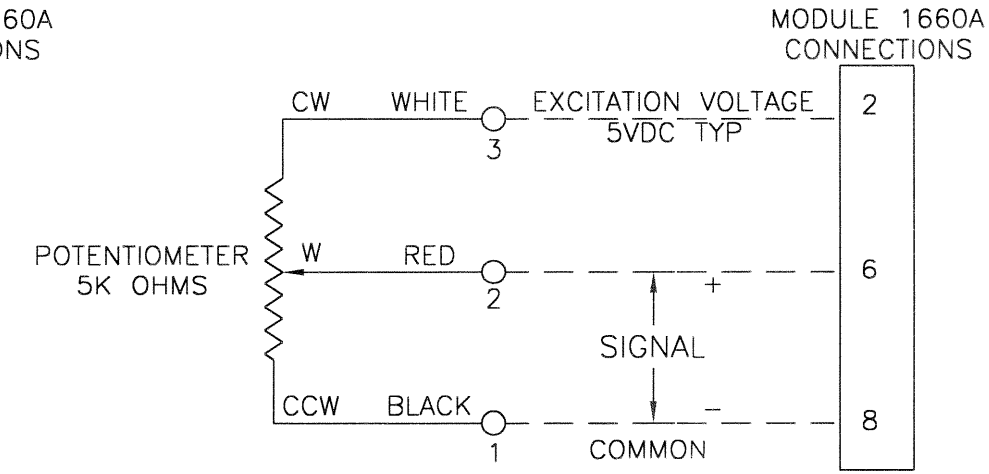

APPEND THE FOLLOWING DOCUMENTS WHEN CHANGING THIS DOCUMENT:	UNLESS OTHERWISE SPECIFIED: DIMENSIONS ARE IN INCHES TOLERANCES XX=±.010 XXX=±.005 ANGLES ±1/2° CONCENTRICITY: .003 TIR DO NOT SCALE DRAWING	DRAWN BY: PK	8/1/03	TITLE SCHEMATIC, EVAPORATION GAUGE ANALOG OUTPUT	allweatherinc
	MATL SEE BILL OF MATERIALS	REVISED BY:			
		CHECKED BY:			
	FINISH AS ISSUED	DESIGN ENGINEER:		SIZE B	DWG NO. 6844-A04
	TREATMENT	PROJECT MANAGER:			
		APPROVALS	DATE	SCALE NONE	RELEASE DATE / SHEET 1 OF 1

DWG. NO. M103040-003

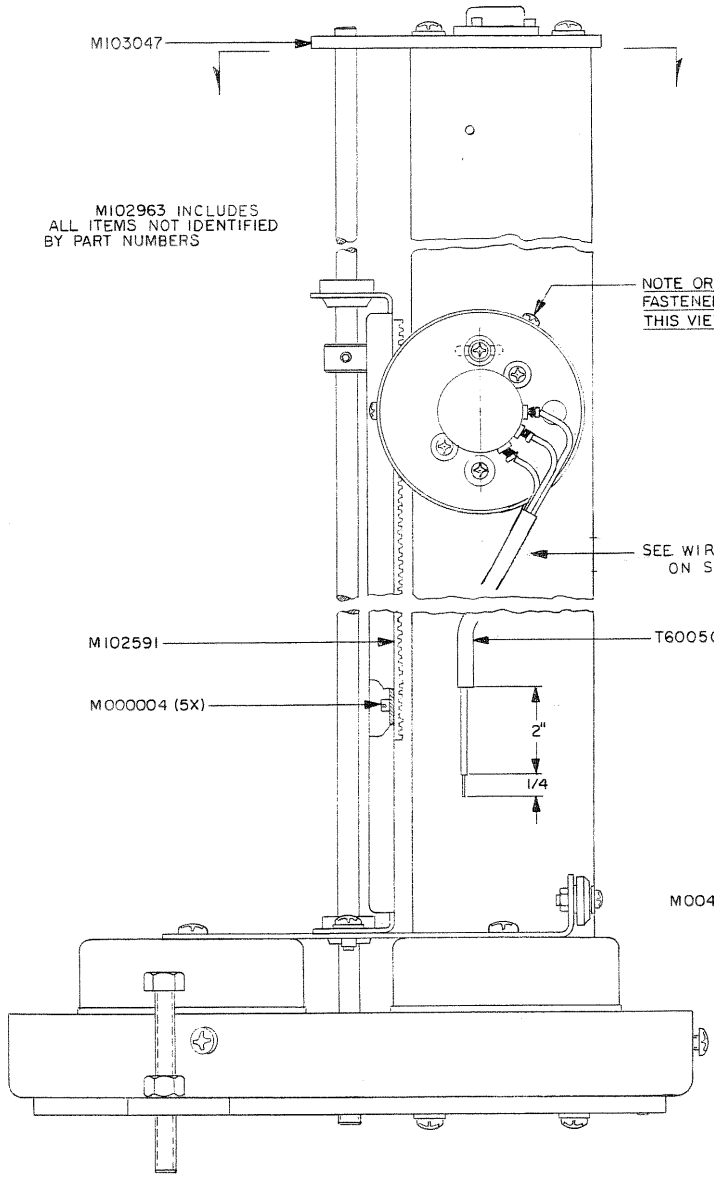

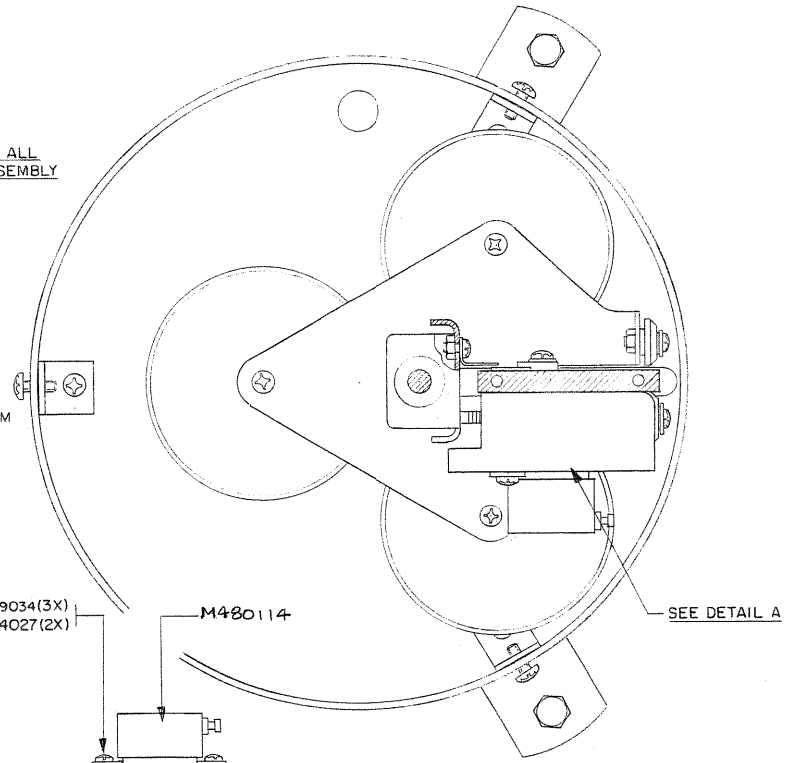

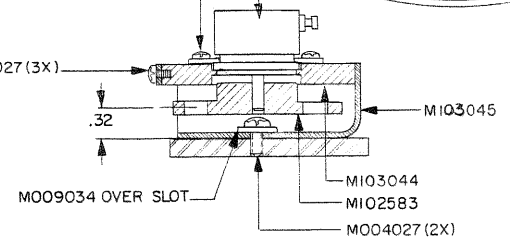

DETAIL A

NOTE: USE LOCKWASHERS UNDER ALL SCREW HEADS EXCEPT M000004, M006047 AND 2 SCREWS

REV	ECN	DATED	QTY	NEXT ASM
	2024	8-31-83	1	6844-A
B	4983	8/1/03		

TOLERANCES UNLESS OTHERWISE NOTED:
XXX= ± .005 XX= ± .010 FRACTIONS= ± .02
ANGLES ± ½° CONCENTRICITY= .003 TIR

MATL
SEE BILL OF MATERIALS

FINISH
AS ISSUED

QUALIMETRICS, Inc.
WEATHERMEASURE / WEATHERTRONICS
Instruments and Systems Division
3213 Orange Grove Avenue
Sacramento California 95660 U.S.A

NOMENCLATURE PN M103040
SENSOR ASSEMBLY, 6844-A

MOD. USAGE 6844-A

SHEET 1 OF 2

M480077 ORIGINAL WIREWOUND POTENTIOMETER

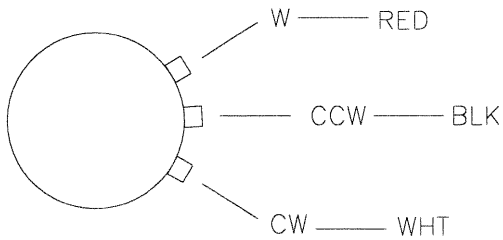

M480114 REPLACEMENT CONDUCTIVE PLASTIC POTENTIOMETER

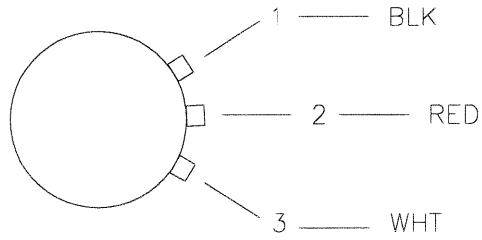

SIZE	DWG NO.	
C	M103040-003	
SCALE NONE	REV LTR B	SHEET 2 OF 2

DWG NO. M102963-003

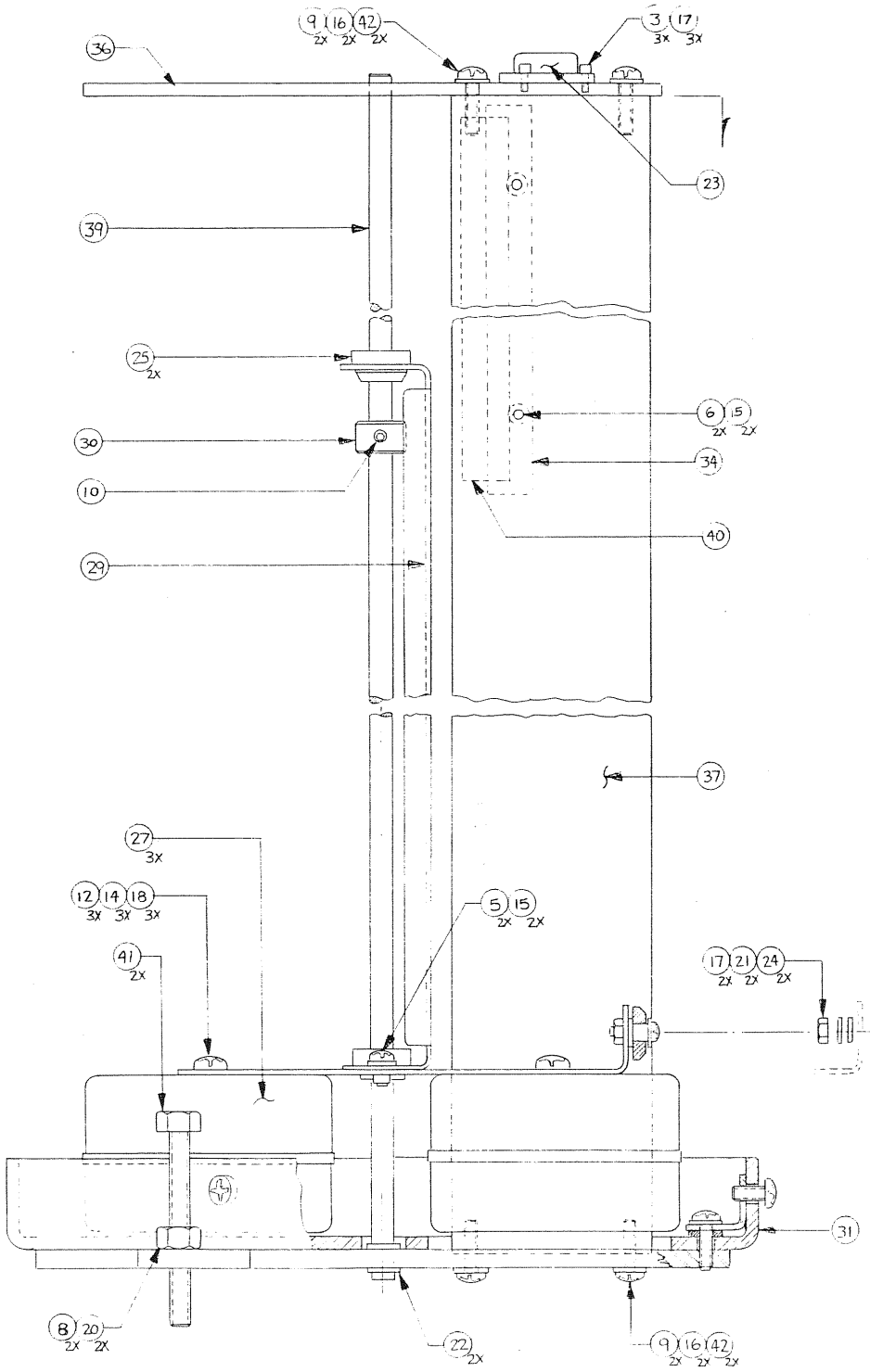

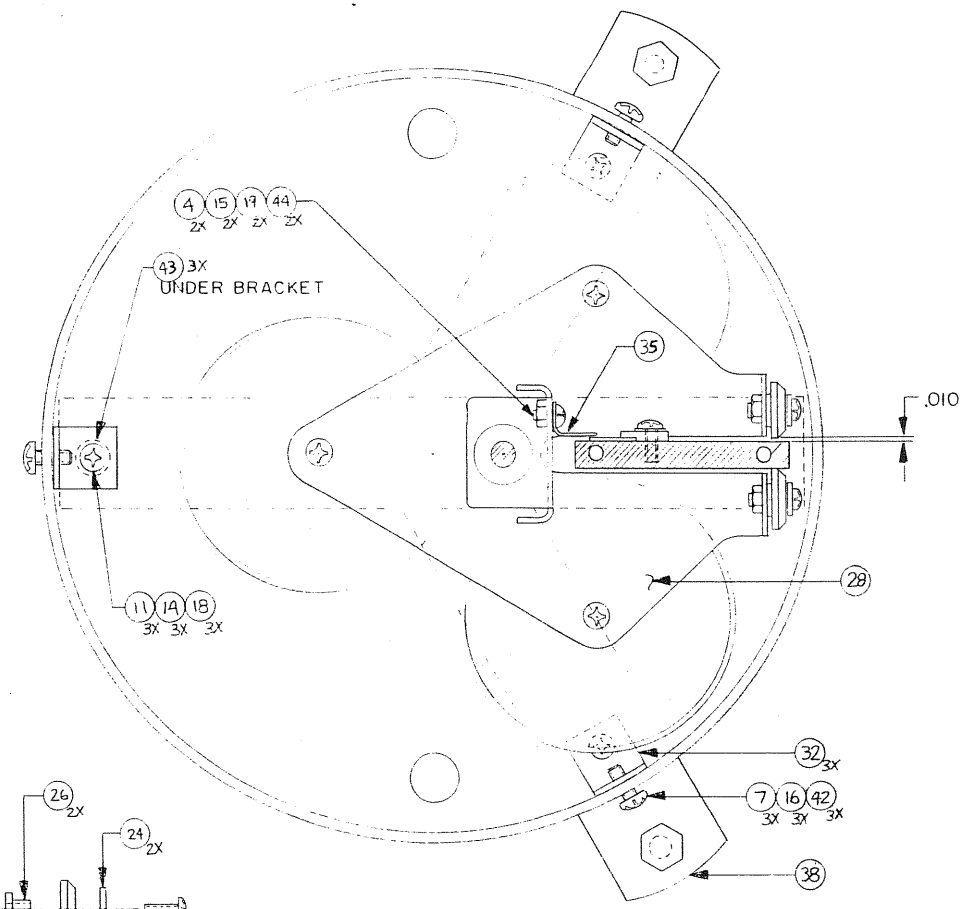

NOTE : USE LOCKWASHERS UNDER ALL SCREW HEADS NOT BEARING ON, OR GOING INTO, PLASTIC.

REV	ECN	DATED	QTY	NEXT ASM
A	2024	8-31-83	1	M103040
B	2273	12-17-84	1	M103041
C	4262	5-12-93	1	M102964

TOLERANCES UNLESS OTHERWISE NOTED:
XXX= ± .005 XX= ± .010 FRACTIONS = ± .02
ANGLES ± ½° CONCENTRICITY= .003 TIR

MATL
SEE BILL OF MATERIAL

FINISH
AS ISSUED

ENGR DT
APPRO DT

QUALIMETRICS, Inc.
WEATHERMEASURE / WEATHERTRONICS
Instruments and Systems Division
3213 Orange Grove Avenue
Sacramento, California 95660 U.S.A.

NOMENCLATURE PN102963
SUBASSEMBLY, COMMON PARTS

MOD. USAGE 6844, 6845, 6848 | SHEET 1 OF 1

BY GEARHEART DT 9-13-83 | SCALE 1X | DWG NO. M102963-003 | C

NOTES: UNLESS OTHERWISE SPECIFIED

1. USE LOCKWASHERS UNDER ALL HEX NUTS AND FLAT WASHERS ON ALL PAINTED SURFACES.

2. INSERT BANDS INTO TUBE BEFORE INSTALLING BRACKETS. (EXAGGERATED THICKNESS)

3. USE FLAT WASHERS UNDER IT-11 AS NEEDED FOR PROPER FIT.

REVISIONS			M102813-003	
REV	ECN	DESCRIPTION	DATE	APPROVED
C	2024	SEE ECN FOR HISTORY	8/31/83	
D	4188	REDRAWN, UPDATED TO CURRENT FORMAT ADD ITEM #'S & CHANGE NOTES		

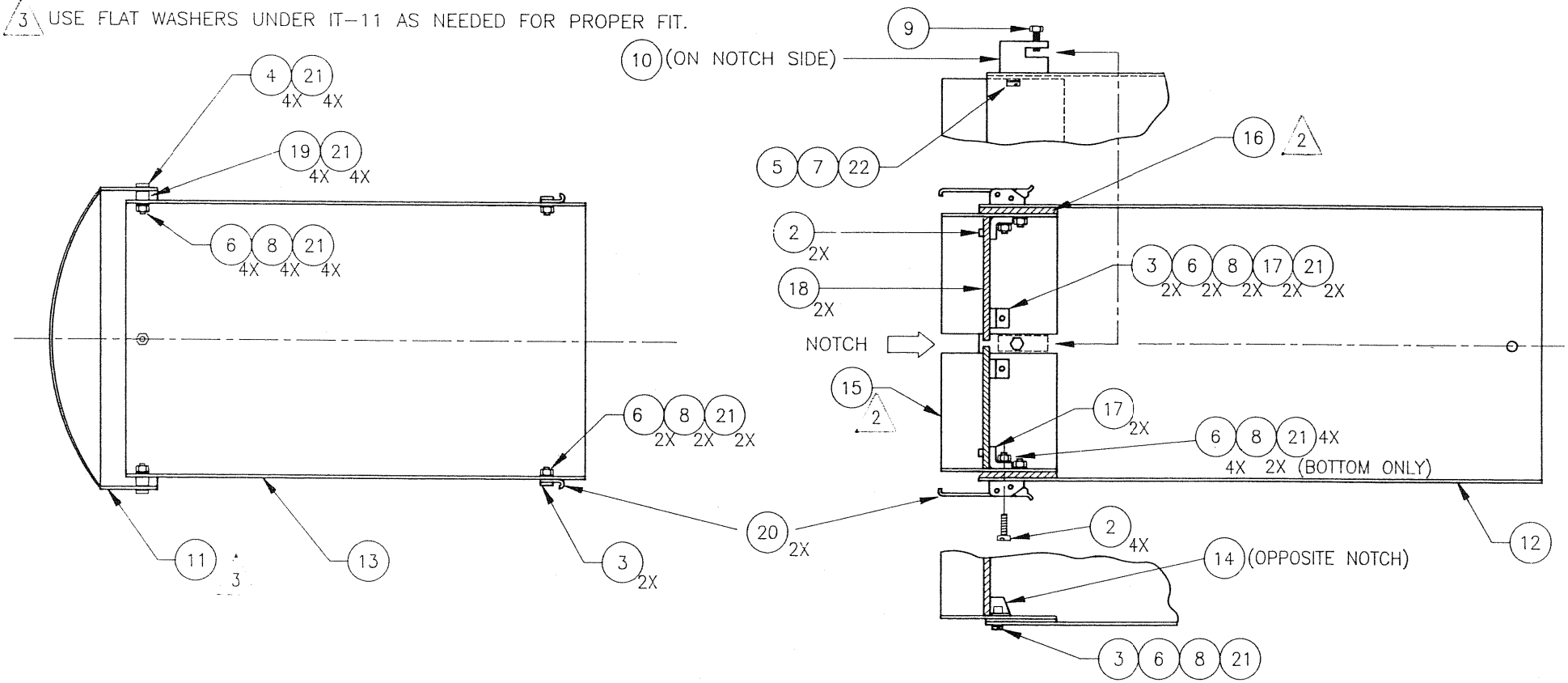

EXCEPT AS MAY OTHERWISE BE SPECIFIED BY CONTRACT, THIS DOCUMENT AND THE DATA DISCLOSED HEREIN AND HEREWITH, IS NOT TO BE USED, REPRODUCED OR DISCLOSED, IN WHOLE OR IN PART, TO ANYONE WITHOUT THE WRITTEN PERMISSION OF QUALIMETRICS, INC..

NEXT	NEXT ASSY	USED ON
QTY REQD	APPLICATIONS	

UNLESS OTHERWISE SPECIFIED: DIMENSIONS ARE IN INCHES
TOLERANCES
XX=±.010 ANGLES ±1/2°
XXX=±.005 FRACTIONS=±.02
DO NOT SCALE DRAWING

MATL: SEE BILL OF MATERIALS

FINISH: AS ISSUED

TREATMENT

DRAWN BY: PETE SANCHEZ	7JAN93	
CHECKED BY: Kelly Clark	09FEB93	
DESIGN ENGINEER:		
PROJECT MANAGER:		
PROGRAM MANAGER:		
APPROVALS	DATE	

QUALIMETRICS, Inc.

TITLE: ASSEMBLY DRAWING STILLING WELL ASSEMBLY

SIZE: B DWG NO. M102813-003

SCALE: FULL RELEASE DATE SHEET 1 OF 1

Parent: 6844-A
EVAPORATION GAGE ANALO
G OUT

UOM EA
Mfg Rev 0
Eff Date 05/29/99

Seq	Item Nbr	Description	UOM	Quantity	Qty Typ	Comp Type	Reference Designators
000	ECN	ENGR CHANGE NUMBER	EA	0.000000	1	2	3416
000	M102813	STILLING WELL ASSEMB	EA	1.000000	1	1	
000	M103040	SENSOR ASSY 6844-A	EA	1.000000	1	1	
000	M408021	GROMMET 1/4 IN ID	EA	1.000000	1	1	
000	T430011	LABEL SERIAL TAG	EA	1.000000	1	1	
000	6844-A01	MANUAL USERS 6844-A	EA	1.000000	1	1	

6 Record(s) Listed

Parent: M103040
SENSOR ASSY 6844-A

UOM EA
Mfg Rev B
Eff Date 08/20/03

Seq	Item Nbr	Description	UOM	Quantity	Qty Typ	Comp Type	Reference Designators
000	M000004	SCR 0-80 X .094 PA	EA	5.000000	1	1	
000	M004027	SCR 4-40 X .250 PA	EA	7.000000	1	1	
000	M006047	SCR 6-32 X .375 BN	EA	1.000000	1	1	
000	M009025	WASHER LOCK #4 SS	EA	7.000000	1	1	
000	M009034	WASHER FLAT #4 SS	EA	3.000000	1	1	
000	M102583	GEAR REMOTE EVAP STA	EA	1.000000	1	1	
000	M102591	RACK-GEAR REWORK EVA	EA	1.000000	1	1	
000	M102963	SUBASSEMBLY COMMON	EA	1.000000	1	1	
000	M103044	PLATE POT MOUNT	EA	1.000000	1	1	
000	M103045	ENCLOSURE POT	EA	1.000000	1	1	
000	M408035	CABLE CLAMP 1/4 GC34	EA	1.000000	1	1	
000	M480114	POTENTIOMETER 5K	EA	1.000000	1	1	
000	T600503	CABLE 3 CND 20 GA W	FT	50.000000	1	1	

13 Record(s) Listed

Parent: M102963
SUBASSEMBLY COMMON PARTS
6845

UOM EA
Mfg Rev 0
Eff Date 05/29/99

Seq	Item Nbr	Description	UOM	Quantity	Qty Typ	Comp Type	Reference Designators
000	ECN	ENGR CHANGE NUMBER	EA	0.000000	1	2	4573
000	M002006	SCR 2-56 X .500 FI	EA	2.000000	1	1	IT-2
000	M002007	SCR 2-56 X .375 FI	EA	3.000000	1	1	IT-3
000	M004002	SCR 4-40 X .375 PA	EA	2.000000	1	1	IT-4
000	M004008	SCR 4-40 X .312 PA	EA	2.000000	1	1	IT-5
000	M004036	SCR 4-40 X .500 PA	EA	2.000000	1	1	IT-6
000	M006023	SCR 6-32 X .375 PA	EA	3.000000	1	1	IT-7
000	M006040	SCR 6-32 X .750 PA	EA	4.000000	1	1	IT-9
000	M007501	SCR SET 4-40 X.125	EA	1.000000	1	1	IT-10
000	M008024	SCR 8-32 X .375 PA	EA	3.000000	1	1	IT-12
000	M008036	SCR 8-32 X .625 BN	EA	3.000000	1	1	IT-11
000	M009025	WASHER LOCK #4 SS	EA	6.000000	1	1	IT-15
000	M009030	WASHER FLAT #6 SS	EA	7.000000	1	1	IT-42
000	M009031	WASHER LOCK #6 SS	EA	7.000000	1	1	IT-16
000	M009034	WASHER FLAT #4 SS	EA	2.000000	1	1	IT-44
000	M009036	WASHER FLAT #2 SS	EA	4.000000	1	1	IT-24
000	M009042	WASHER LOCK .250 SS	EA	2.000000	1	1	IT-8
000	M009046	WASHER LOCK #2 SS	EA	5.000000	1	1	IT-17
000	M009047	WASHER LOCK #8 SS	EA	6.000000	1	1	IT-18
000	M009070	WASHER FLAT #8 SS	EA	6.000000	1	1	IT-14
000	M009502	NUT HEX 4-40 SS .	EA	2.000000	1	1	IT-19
000	M009509	NUT HEX .250-20 SS .	EA	2.000000	1	1	IT-20
000	M009514	NUT HEX 2-56 SS .	EA	2.000000	1	1	IT-21
000	M027505	RING RTNG .250 EXT C	EA	2.000000	1	1	IT-22
000	M028076	LEVEL BUBBLE	EA	1.000000	1	1	IT-23

Parent: M102963
SUBASSEMBLY COMMON PARTS
6845

UOM EA
Mfg Rev 0
Eff Date 05/29/99

Seq	Item Nbr	Description	UOM	Quantity	Qty Typ	Comp Type	Reference Designators
000	M102577	BEARING SLIDING GUI	EA	2.000000	1	1	IT-25
000	M102581	PIVOT BEARING	EA	2.000000	1	1	IT-26
000	M102587	FLOAT	EA	3.000000	1	1	IT-27
000	M102590	PLATE FLOAT	EA	1.000000	1	1	IT-28
000	M102592	CARRIER RACK	EA	1.000000	1	1	IT-29
000	M102624	STOP PEN RANGE	EA	1.000000	1	1	IT-30
000	M102827	BEARING GUIDE	EA	2.000000	1	1	IT-33
000	M102972	CLAMP SCALE	EA	1.000000	1	1	IT-34
000	M103046	POINTER	EA	1.000000	1	1	IT-35
000	M103047	PLATE DRUM MOUNTING	EA	1.000000	1	1	IT-36
000	M103048	MAINBRACE	EA	1.000000	1	1	IT-37
000	M103050	CROSSMEMBER ASSY	EA	1.000000	1	1	IT-38
000	M103053	ROD GUIDE EVAP GAGE	EA	1.000000	1	1	IT-39
000	M104872	WATER BAFFLE LOWER E	EA	1.000000	1	1	IT-31
000	M104873	BRACKET MTG LOWER TU	EA	3.000000	1	1	IT-32
000	T250002	STEEL RULE ENGLISH/M	EA	1.000000	1	1	IT-40
000	T720413	SCR .250-20 X 2 TAP	EA	2.000000	1	1	IT-41

42 Record(s) Listed

Parent: M102813
STILLING WELL ASSEMBLY

UOM EA
Mfg Rev 0
Eff Date 05/29/99

Seq	Item Nbr	Description	UOM	Quantity	Qty Typ	Comp Type	Reference Designators
000	ECN	ENGR CHANGE NUMBER	EA	0.000000	1	2	4188 1/19/93
000	M006023	SCR 6-32 X .375 PA	EA	5.000000	1	1	IT-3
000	M006024	SCR 6-32 X .500 PA	EA	6.000000	1	1	IT-2
000	M006040	SCR 6-32 X .750 PA	EA	4.000000	1	1	IT-4
000	M008036	SCR 8-32 X .625 BN	EA	1.000000	1	1	IT-5
000	M009030	WASHER FLAT #6 SS	EA	21.000000	1	1	IT-21
000	M009031	WASHER LOCK #6 SS	EA	15.000000	1	1	IT-6
000	M009047	WASHER LOCK #8 SS	EA	1.000000	1	1	IT-7
000	M009070	WASHER FLAT #8 SS	EA	1.000000	1	1	IT-22
000	M009505	NUT HEX 6-32 SS .	EA	11.000000	1	1	IT-8
000	M012034	SCR .250-20 X .750 H	EA	1.000000	1	1	IT-9
000	M102814	HANGER EVAPORATION	EA	1.000000	1	1	IT-10
000	M102815	COVER STILLING WELL	EA	1.000000	1	1	IT-11
000	M102817	TUBE BASE	EA	1.000000	1	1	IT-12
000	M102818	TUBE TOP SECTION	EA	1.000000	1	1	IT-13
000	M102819	SUPPORT CONDENSATIO	EA	1.000000	1	1	IT-14
000	M102820	BAND TUBE ALIGNING	EA	1.000000	1	1	IT-15
000	M102821	SPACER ALIGNING BAND	EA	1.000000	1	1	IT-16
000	M102826	BRACKET TUBE	EA	4.000000	1	1	IT-17
000	M103043	SHIELD CONDENSATION	EA	2.000000	1	1	IT-18
000	M408190	SPACER 1/4 OD X NO6	EA	4.000000	1	1	IT-19
000	M408191	DRAW LATCH AND KEEPE	EA	2.000000	1	1	IT-20

22 Record(s) Listed

allweatherinc

All Weather Inc.
1165 National Drive
Sacramento, CA 95818
Fax: 916.928.1165
Phone: 916.928.1000
Toll Free: 800.824.5873
www.allweatherinc.com

6844-A01
ECO 4983
August, 2003